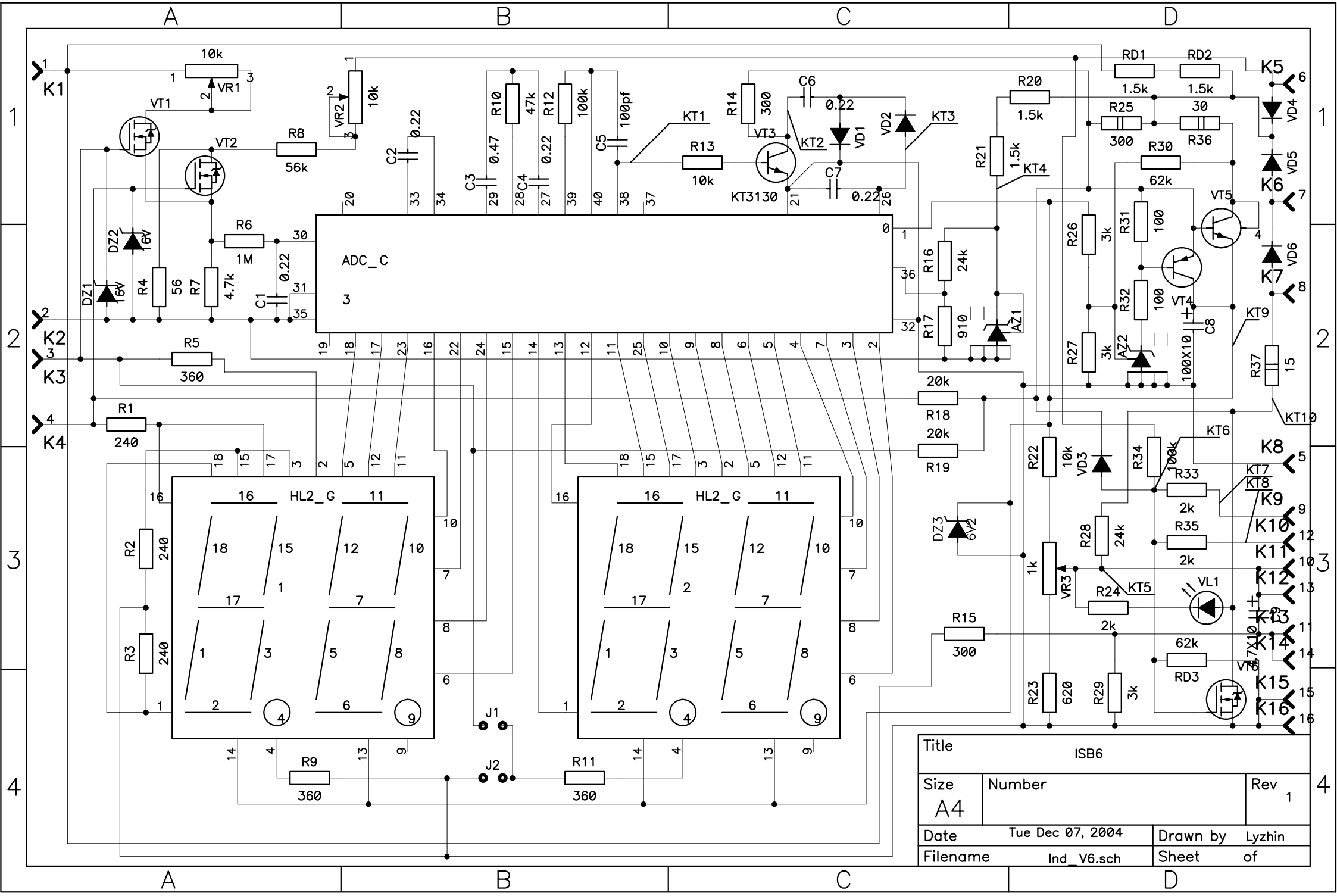

ADC_C
HL2_G
HL2_G
KT3130
Title
ISB6
Size
A4
Number
Rev
1
Date
Tue Dec 07, 2004
Drawn by
Lyzhin
Filename
Ind_V6.sch
Sheet
of